D|13 INTEGRATED SINK SYSTEM

FEATURING THE NEW XLERATORsync® HAND DRYER

INSTALLATION INSTRUCTIONS – SPECS SERIES – MDL#D13ISS30-BAS

1. **WALL BRACKET AND ENCLOSURE INSTALLATION (G):**
   a. FRAME ASSEMBLY: FASTEN TO THE WALL 33 1/2'' OFF THE FINISHED FLOOR FOR ADA COMPLIANCE. FASTEN TO BLOCKING IN THE WALL WITH INDUSTRY STANDARD FASTENERS FOR EXISTING WALL CONDITIONS. BACK OF UNIT HAS BEEN FACTORY CUT TO THE PRE-SUPPLIED PLUMBING AND ELECTRICAL TEMPLATE. ADDITIONAL HOLE MODIFICATIONS MAY BE NEEDED DUE TO FIELD CONDITIONS. (WALL FASTENERS SUPPLIED BY INSTALLATIONCONTRACTOR)
   b. BLOCKING – Suggested 16 gauge sheet metal, 2"x6" or like material between studs at required heights per **FIGURE 2**)
2. **FIXTURE COMPONENT INSTALLATION: (FAUCET, SOAP AND HAND DRYER SPOUTS. B,C,D)**
   a. FOR EASE OF INSTALLATION LAY THE DECK/SINK ON IT'S FRONT OR BACK AND INSTALL FIXTURES PER MANUFACTURER INSTRUCTIONS TO THE D13-U1525 SINK.
3. **SINK/ DECK INSTALLATION (F):**
   a. INSTALL BY APPLYING QUARTER SIZE DABS OF SILICONE TO THE TOP AND FRONT APRON OF THE FRAME ASSEMBLY.
   b. SLIDE D13-U1525 SINK **(F)** DOWN ON TO THE FRAME AND PRESS INTO LOCATION. ALLOW ADHESIVE TO SET.
   c. PIVOT DRAIN COVER* **(E)**: INSTALL THE TWO PINS AND NYLON BUSHINGS WITH TAMPER-PROOF SCREW AND RETAINER CLIP PROVIDED IN THE INSTALLATION PACKAGE.
   d. BACK SPLASH **(A)**: (IF APPLICABLE) SET WITH SILICONE SEALER TO WALL & DECK PER INDUSTRY STANDARD INSTALLATION.
4. **UNDER COUNTER COMPONENT HOOK-UPS.**
   a. XLERATORsync HAND DRYER **(I)**: MOUNTS ON PRE-INSTALLED BRACKETS ON BACK WALL OF THE FRAME ASSEMBLY. INSTALL AIR HOSE FROM DRYER UNIT TO DRYER NOZZLE ON THE D|13-U1525 SINK. PLUG UNIT INTO WALL PLUG . FOLLOW MANUFACTURERE INSTRUCTIONS.
   b. ZURN THERMOSTATIC MIXING VALVE **(H)**: INSTALL PER MANUFACTURER INSTRUCTIONS
   c. ZURN OR OS&B OFF-SET DRAIN **(J)**: INORGANIC ANTIMICROBIAL OFFSET LAVATORY GRID STRAINER LESS OVERFLOW.
   d. STERN 6L SOAP**** TANK KIT **(K)**: INSTALL SOAP TANK BRACKET ONTO BACK WALL OF FRAME ASSEMBLY. FOLLOW MANUFACTURER INSTRUCTIONS.

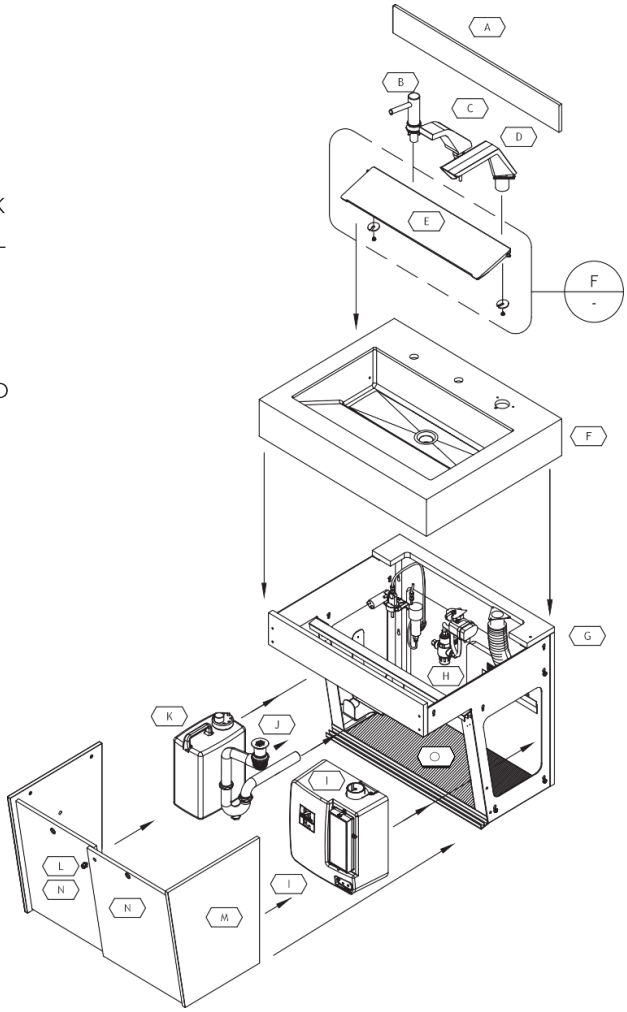

Figure 1

D|13 INTEGRATED SINK SYSTEM

FEATURING THE NEW XLERATORsync® HAND DRYER

INSTALLATION INSTRUCTIONS – SPECS SERIES – MDL#D13ISS30-BAS

5. ENCLOSURE INSTALLTION FINISHES:

a. SLIDING ACCESS PANELS*** **(L)**: INSTALL 1 AT A TIME, MATCHING HOLES FOR LOCK IN CENTER. ONE PANEL ON INSIDE TRACK AND 1 IN OUTER TRACK

b. SIDE COVER PANELS** **(M)**: INSTALL 4 SCREWS PROVIDED IN THE INSTALLATION PACKET. ALIGN PANEL WITH THE KEY HOLE SLOTS IN THE SUPPORT BRACKET SLIDE PANEL DOWN TO LOCK IN PLACE. TIGHTEN SCREWS TO SECURE PANEL.

c. CHROME PUSH LOCK **(N)**: INSTALL THROUGH PRE-DRILLED HOLES IN SLIDING OR HINGED DOORS. KEYED THE SAME IF MUPLTIPLE UNITS IN FACILITY.

d. 3/4" MED-X BOTTOM PANEL **(O)**: SENT LOOSE. INSTALL BY RESTING INSIDE ENCLOSURE ONTO BOTTOM BRACKETS. CAN BE SECURED WITH FASTENERS THROUGH KEY HOLE SLOTS IN BOTTOM OF FRAME.

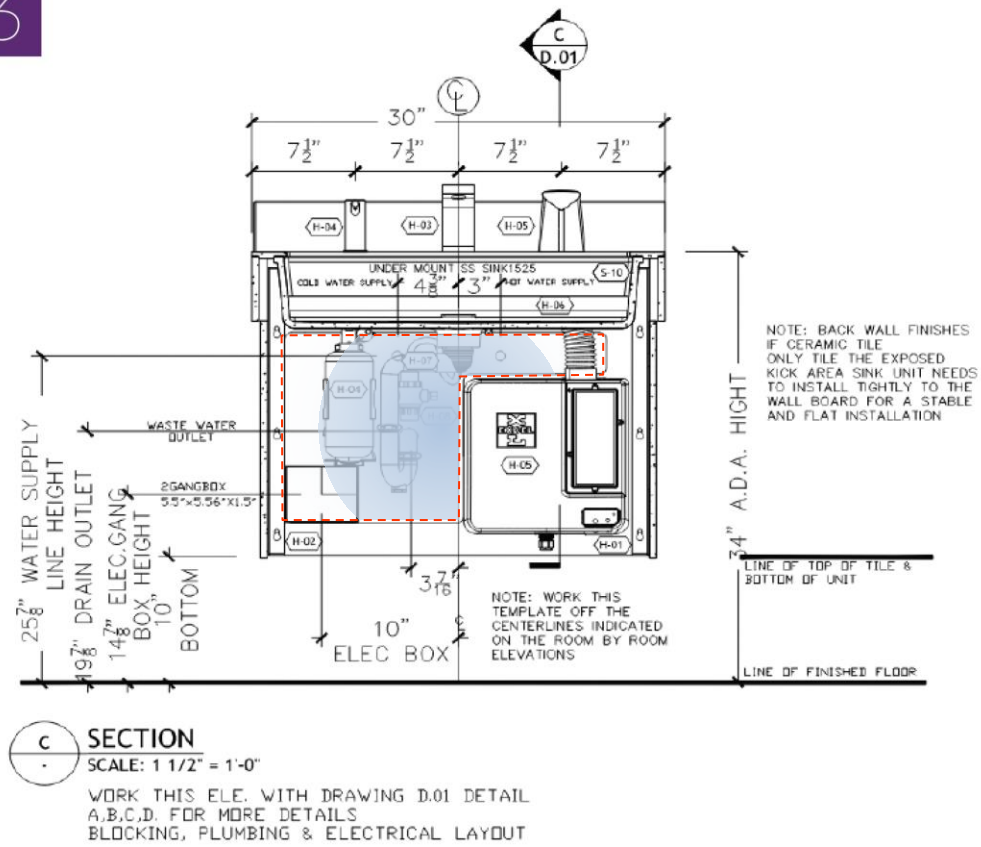

D|13 INTEGRATED SINK SYSTEM

FEATURING THE NEW XLERATORsync® HAND DRYER

INSTALLATION INSTRUCTIONS – SPECS SERIES – MDL#D13ISS30-BAS

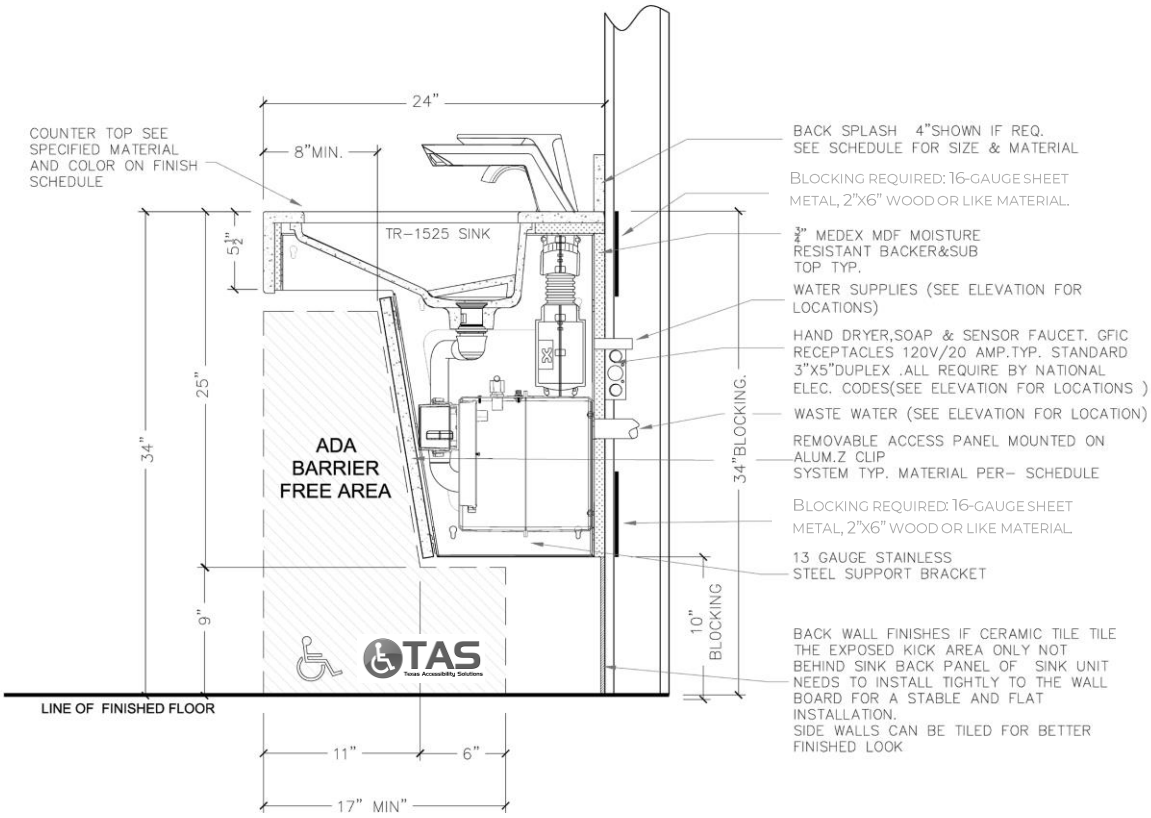

FIGURE 2

NOTE: ALL PLUMBING TO BE INSTALLED BY LICENSED PLUMBING CONTRACTOR.

*Gradient Style Sink Has Infinity Drain, No Drain Cover Supplied
**Some wall-to-wall installation may not require side cover panels
***Does not apply to systems with pre-installed hinged doors.
****6L soap tank is an upgrade. Standard is 1.6L tank.

D|13 GROUP

GOOD DESIGN SOLVES EVERYTHING

245 West Central Street / Natick, MA 01760 / 617-307-1150 / D13Group.com / design@D13Group.com