# D|COR SERIES
## DESIGNED TO FORM

DCOR 25" SINK SYSTEM FEATURING
THE XLERATORsync® HAND DRYER

## SOLID SURFACE WALL-MOUNT VANITY FEATURES & BENEFITS

### SINK BASIN

- 100% solid surface polymer blend
- ADA Compliant
- Channel Drain
- Removable drain box accepts standard drain
- 22" D x 25" W x 28" H with 4" molded integral backsplash
- Neutral colors - easy to design around
- Matte finish for easy maintenance

### HARDWARE

- Galvanized powder coated steel bracket for wall mounting
- ADA Compliant stainless steel enclosure hides plumbing
- Enclosure tamper resistnace, accessible for maintenance

### FIXTURES

- XLERATORsync® Hand Dryer: Polished Chrome
  - Electrostatic HEPA (eHEPA®) Filtration System, proven to remove 99.999% of viruses and 99.97% of potentially present bacteria at 0.3 microns from the airstream[1]
  - Patent Pending Sound Suppression Air Delivery System: 68-78 dB[2]
- Condor 1010E electronic touch free faucet
- Elegant Design with anti-vandal features
- Dual Power input (battery or transformer)

### STANDARDS/CERTIFICATIONS

- CSA B45.5/IAPMO Z124 Tested and Certified Annually by an Independent Research Laboratory
- HUD UM Bulletin No. 73a
- NSF 51
- ASTN E84: Class 1
- UL Listed
- eHEPA Filtration tested by LMS Technologies
- MA Plumbing Approved Product

[1]Based on testing performed by LMS Technologies, 2023. [2]dB is an expression of the relative loudness of sounds in air as percieved by the human ear.

D|13 GROUP

**GOOD DESIGN SOLVES EVERYTHING.**
245 West Central Street / Natick, MA 01760 / 1-888-D13-SYNC / D13Group.com / design@d13group.com

# D|COR SERIES
## DESIGNED TO FORM

DCOR 25" SINK SYSTEM FEATURING
THE XLERATORsync® HAND DRYER

## SINK SOLID COLORS

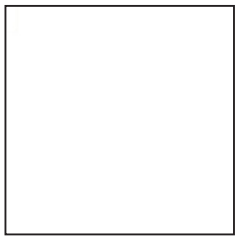

**DESIGNER WHITE**

## SINK PATTERN COLORS

**CORINTH**

**ONIAS**

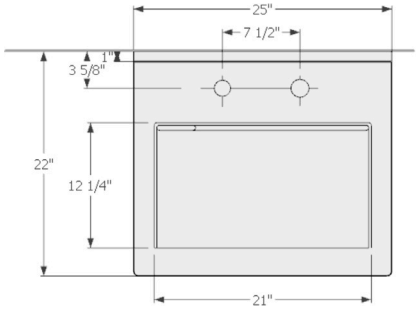


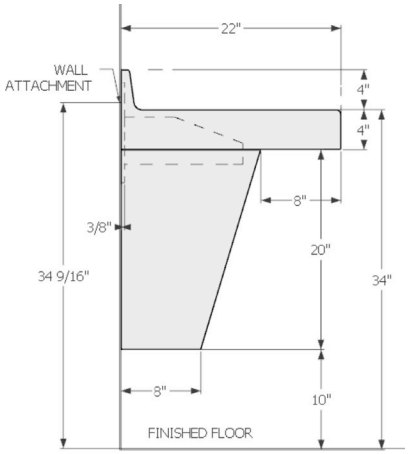


## TECHNICAL INFORMATION

- ✔ Single bowl configuration
  - Wall Mount Installation
    - Optimal: Basin alone can be used on cabinetry
  - 22" D x 25" W x 28" H with 4" molded
  - Bowl area: Width: 12-1/4"
    Length: 21"
    Depth: 5"

## WARRANTY

- ✔ 3-Year Limited Warranty Sink
- ✔ 7-Year Limited Warranty on Hand Dryer
- ✔ Manufacturer Warranty on Faucet

D|13 GROUP

**GOOD DESIGN SOLVES EVERYTHING.**
245 West Central Street / Natick, MA 01760 / 1-888-D13-SYNC / D13Group.com / design@d13group.com