D|VERSE ESSENCE AND FLOWLINE SINK & DRYER BUNDLE

FEATURING THE NEW XLERATORsync® HAND DRYER

XLERATORsync® Hand Dryer

- Width: $33\frac{3}{8}$ (86mm)
- Height: $7\frac{1}{2}$ (191mm)
- Depth: $10\frac{13}{16}$(275mm)
- Part Number: D13-ISS

Standard Fixtures

- XLERATORsync Hand Dryer: Polished Chrome.
- Custom Finishes Available Upon Request.

Certifications

Features

- Electrostatic HEPA (eHEPA®) Filtration System: Removes 99.999% of viruses and 99.97% of potentially present bacteria at 0.3 microns from the airstream[1]
- 10-15 Seconds Dry Time
- Adjustable Heat Settings, Speed and Sound Control, Sound Suppression Air Delivery System.

[1]Based on testing performed by LMS Technologies, 2023.

D|13

GOOD DESIGN SOLVES EVERYTHING.

Contact us today at 888-D13-Sync or design@D13Group to learn more.

D|VERSE ESSENCE AND FLOWLINE SINK & DRYER BUNDLE

FEATURING THE NEW XLERATORsync® HAND DRYER

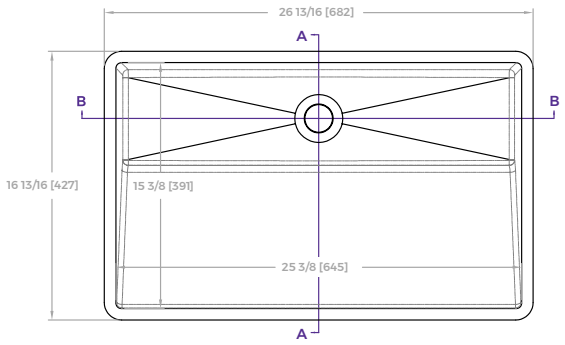

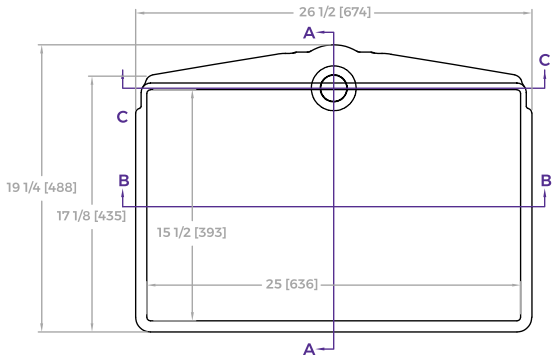

Essence

Flowline

D|13 ADA BASIN STYLE SINK

Outside Bowl Dimensions

- **Width:** 26.81 inches (681.03 mm)
- **Height:** 7.18 inches (182.56 mm)
- **Depth:** 16.81 inches (427.03 mm)
- **Part Number:** D13-U1525

Inside Bowl Dimensions

- **Width:** 25.06 inches (642.94 mm)
- **Height:** 5.25 inches (133.35 mm)
- **Depth:** 15.31 inches (388.94 mm)
- **Part Number:** D13-U1525

Standards/Certifications

- CSA B45.5/IAPMO Z124. Tested/Certified Annually By Independent Research Laboratory
- BASIN SINK: MA Plumbing Approved Product
- HUD UM Bulletin No. 73a
- ASTM E84: Class 1
- NSF 51
- UL Listed

- Precision-cast from **durable 1/2" solid surface material** for lasting performance.
- Available without a cover; a **matching drain "pivot" cover** can be provided from 1/2" solid surface material.
- **Covered drain design** (*when used with the pivot cover) allows for a seamless aesthetic and easy cleaning.
- **Timeless, versatile design** ideal for residential, clinical, commercial, restaurant, and laboratory applications.
- Supports **ADA-compliant installations** down to 17" depths, enhancing accessibility.
- **No overflow design** with an easy-to-clean slot that prevents splashback, ideal for hygienic environments such as hospitals.
- **Certified for quality and compliance**: MA Plumbing, Home Innovation Lab, and UL Certified.
- **Compatible with all countertop surfaces** and backed by industry-standard warranties.
- **Proudly made in the USA**, ensuring premium craftsmanship and durability.

[1]Based on testing performed by LMS Technologies, 2023.

D|13

GOOD DESIGN SOLVES EVERYTHING.

Contact us today at 888-D13-Sync or design@D13Group to learn more.